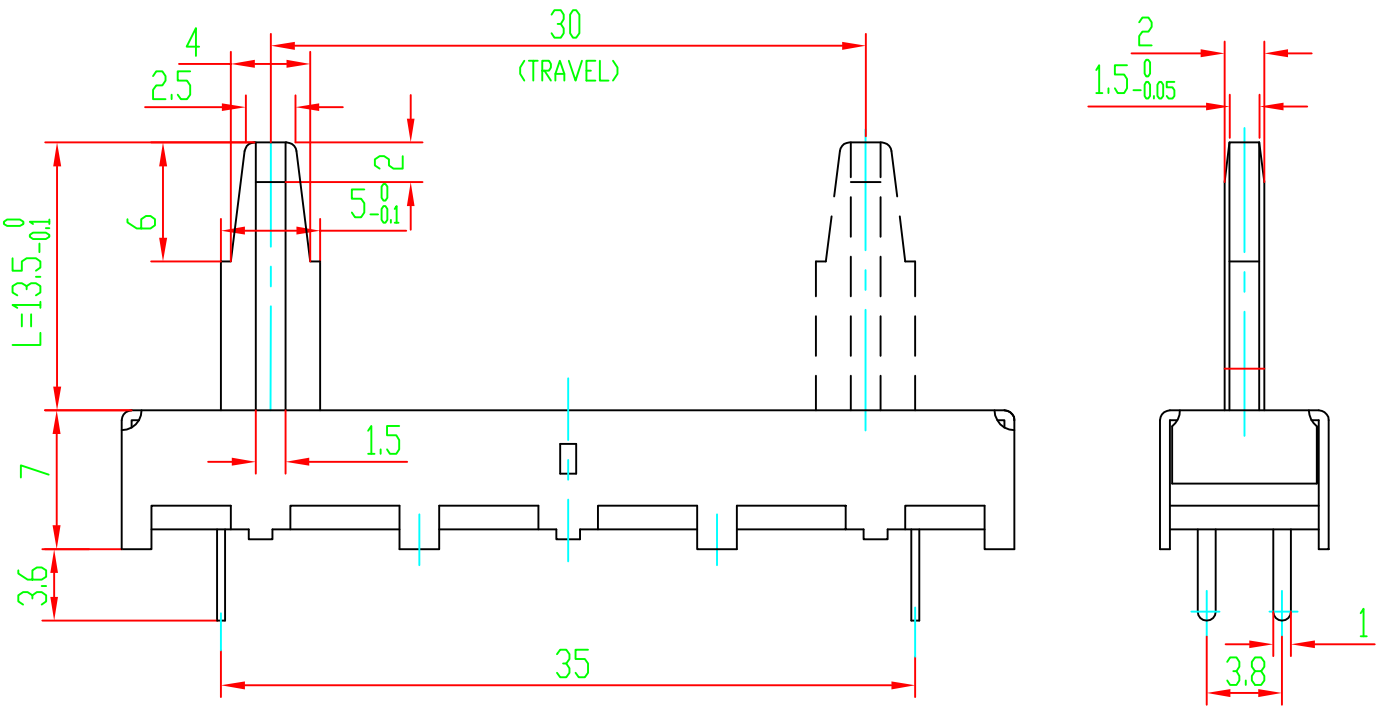

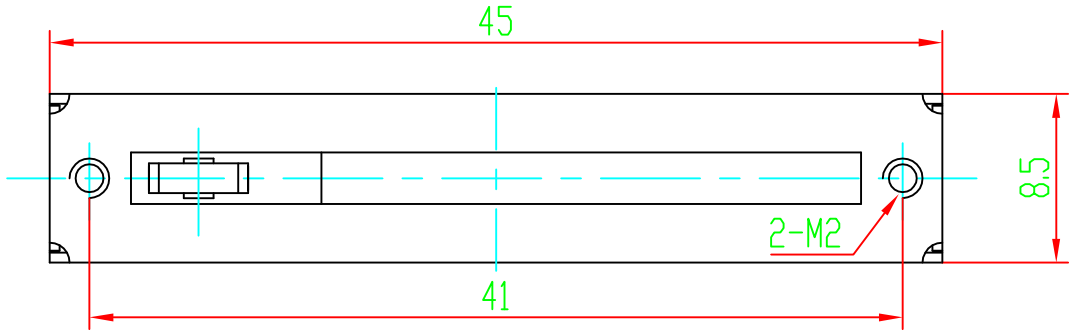

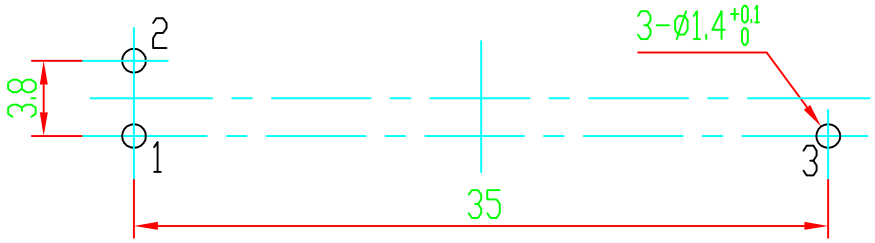

02				05			
01				04			
	DATE	REVISION	APPROVED	03			

			MODEL: WH3043 L13.5C DRAWING NO:
DRAW	CHKD	APPD	常州宇豪电子有限公司 CHANGZHOU YUHAO ELECTRONIC CO.,LTD.