Shaft Shown in Full
C.C.W. Position

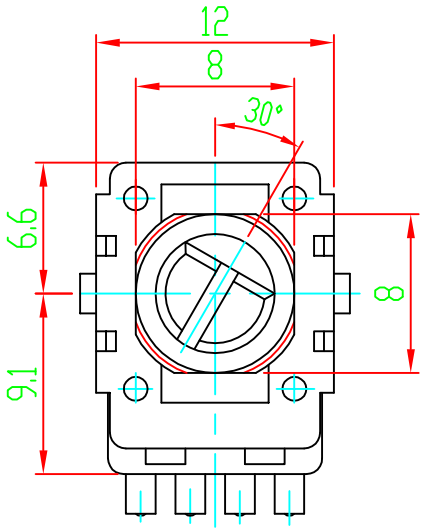

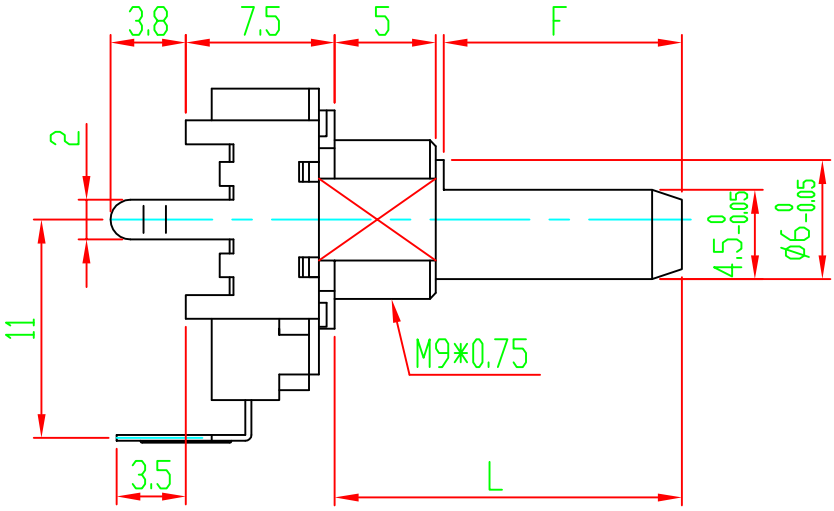

P.C.B MOUNTING DETAIL

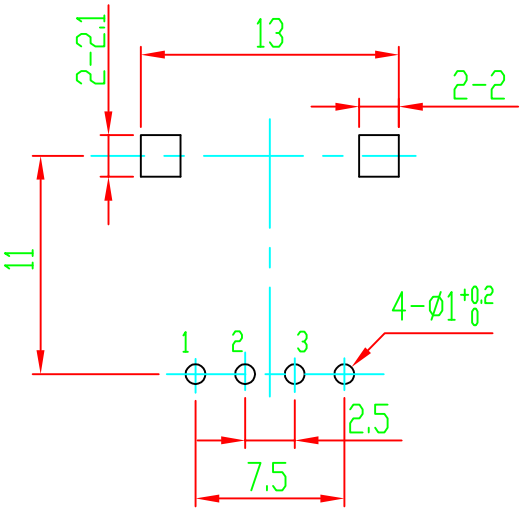

L	12.5	15	17.5	20	25
F	7	4.5	12	12	12

02				05			
01				04			
	DATE	REVISION	APPROVED	03			

DRAW	CHKD	APPD

MODEL: WH1112A-1 L17.5F12 "一"槽

DRAWING NO:

常州宇豪电子有限公司
CHANGZHOU YUHAO ELECTRONIC CO.,LTD.