Shaft Shown in Full
C.C.W. Position

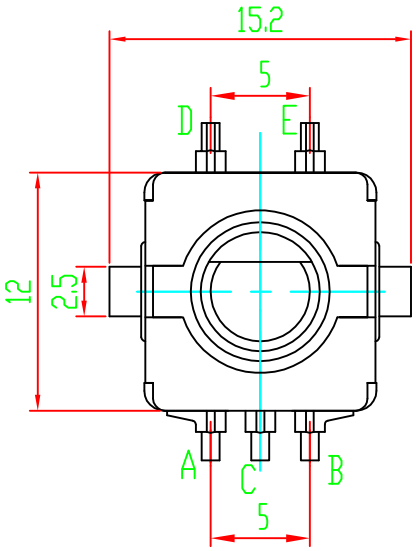

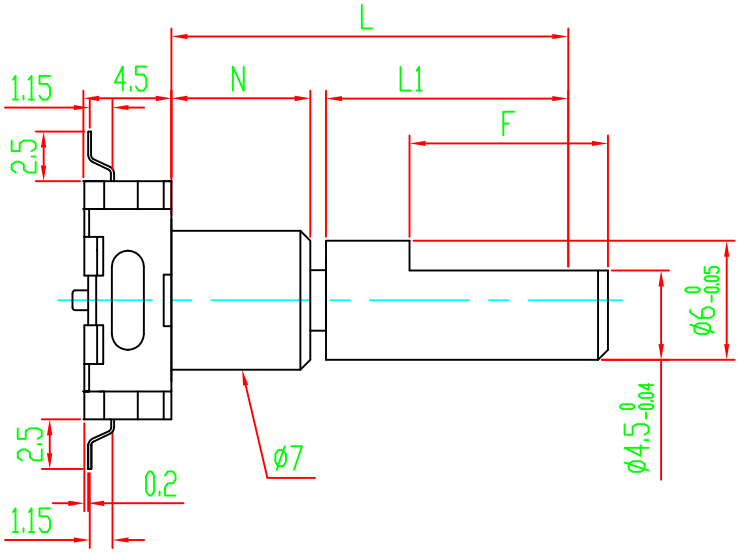

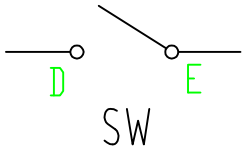

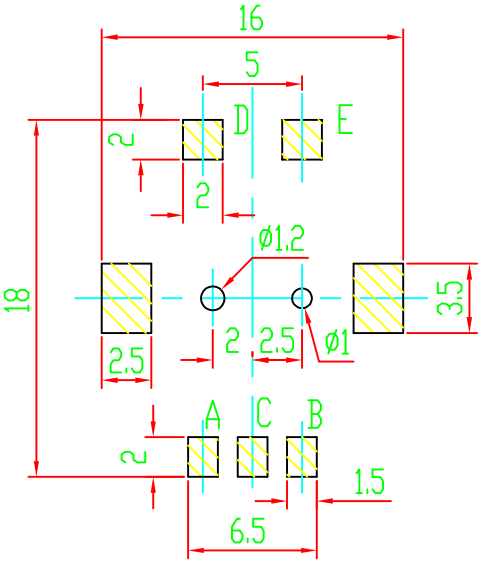

P.C.B MOUNTING DETAIL

L	15	16	16.7	18	20	22.5
L1	7.5	8.5	9.2	10.5	12.5	15
F	5	5	7	8	10	13.3
N	7	7	7	7	7	7

02				05			
01				04			
	DATE	REVISION	APPROVED	03			

DRAW	CHKD	APPD

MODEL: EC11-1S-D7*4.5-L20F10 SMT 光轴套

DRAWING NO:

常州宇豪电子有限公司
CHANGZHOU YUHAO ELECTRONIC CO.,LTD.