Shaft Shown in Full
C.C.W. Position

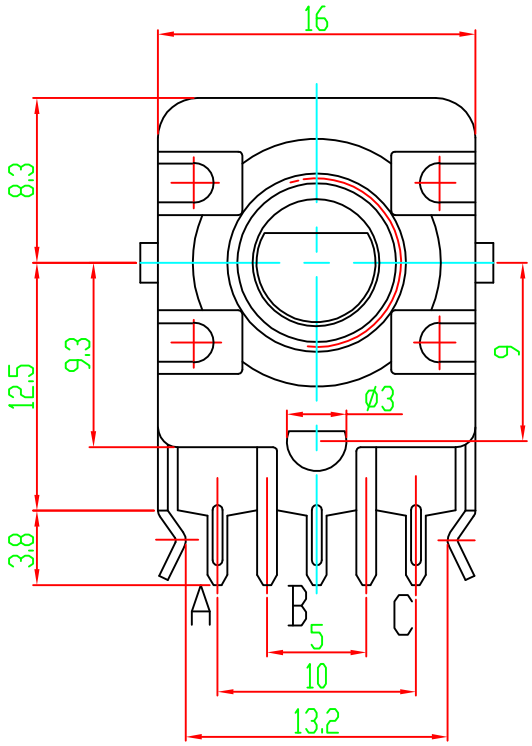

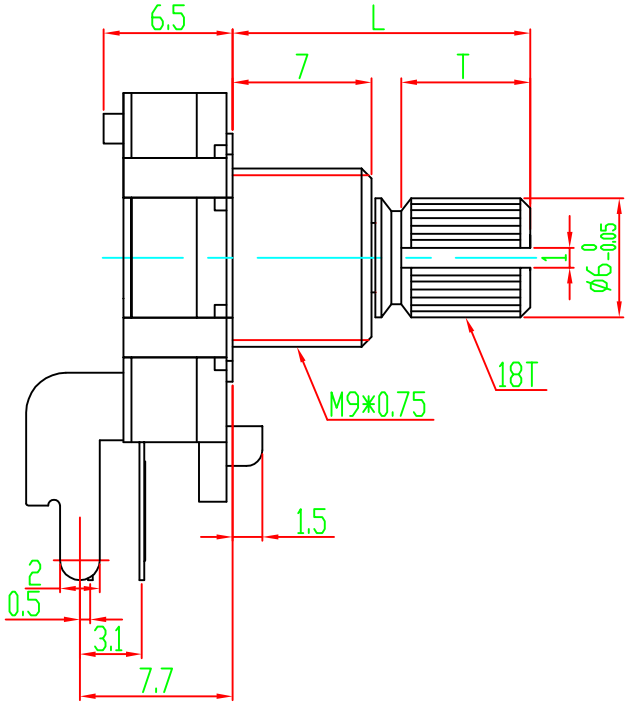

P.C.B MOUNTING DETAIL

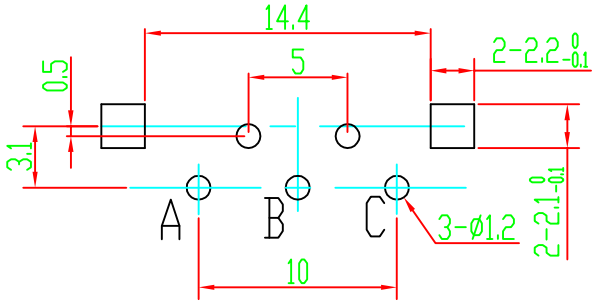

L	15		
T	6.5		

02				05			
01				04			
	DATE	REVISION	APPROVED	03			

			MODEL: EC16-2S-D7 L15KQ DRAWING NO:
DRAW	CHKD	APPD	常州宇豪电子有限公司 CHANGZHOU YUHAO ELECTRONIC CO.,LTD.